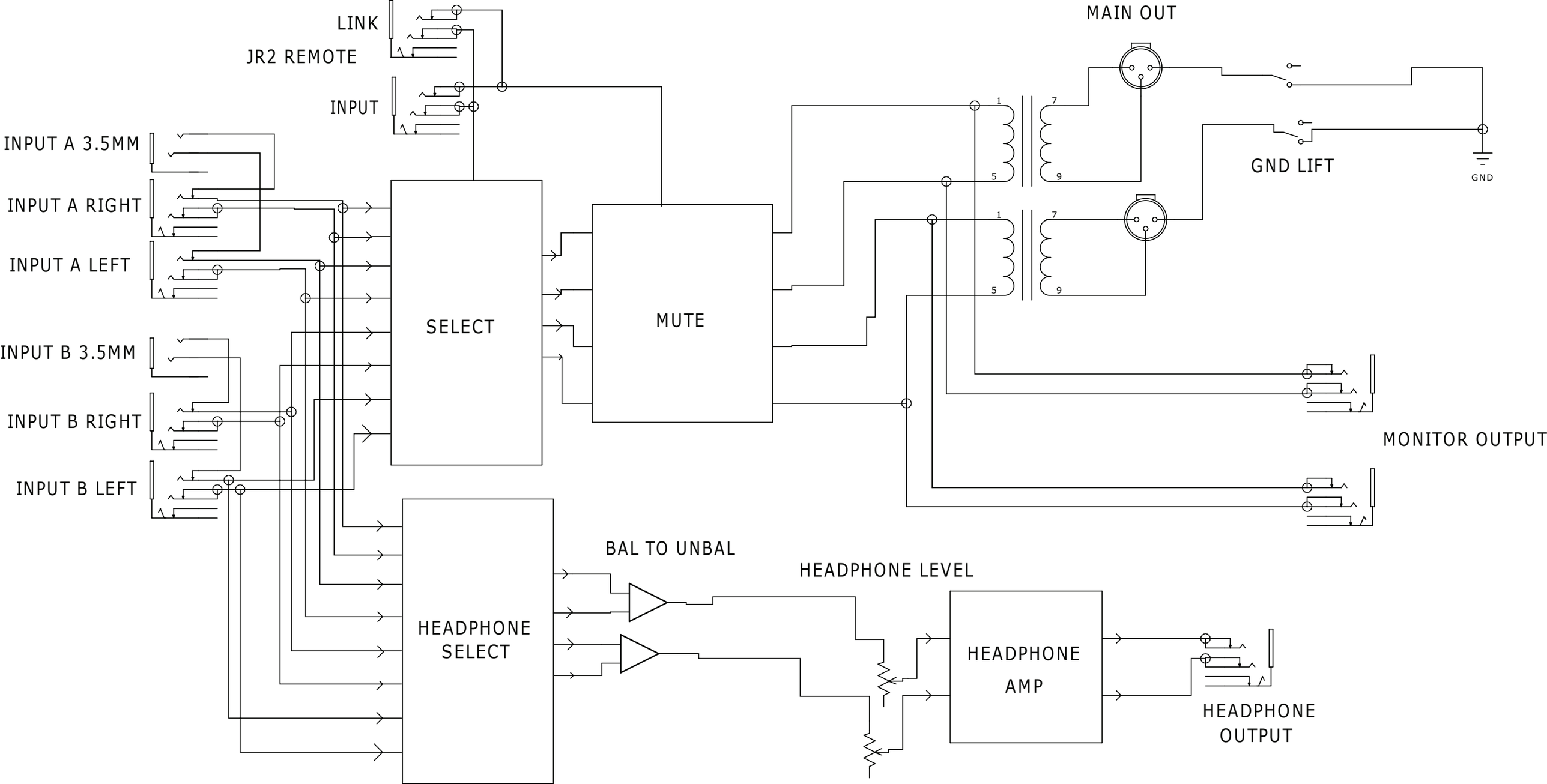
LINK
JR2 REMOTE
INPUT
MAIN OUT
INPUT A 3.5MM
INPUT A RIGHT
INPUT A LEFT
INPUT B 3.5MM
INPUT B RIGHT
INPUT B LEFT
SELECT
MUTE
GND LIFT
GND
MONITOR OUTPUT
BAL TO UNBAL
HEADPHONE LEVEL
HEADPHONE SELECT
HEADPHONE AMP
HEADPHONE OUTPUT